Pneumatic Remote Control Valves

SVL are proportional, pneumatic remote control valves designed to operate directional control valves in applications like tipping gear and big fork-lift trucks.

In vehicles where compressed air is available, SVL offer freedom of location of components together with good manoeuverability. The valves have well balanced operating forces, they are of a sturdy design and of a space-saving size.

They are available with different levers.

The directional control valve, which is operated by the remote control valve, should have a spool control, consisting of an actuating cylinder and a centering spring, so dimensioned that a low air-pressure makes the spool start moving and makes it reach full spool travel at maximum air-pressure. This, together with the small operating forces of the remote control valve, results in good manoeuverability.

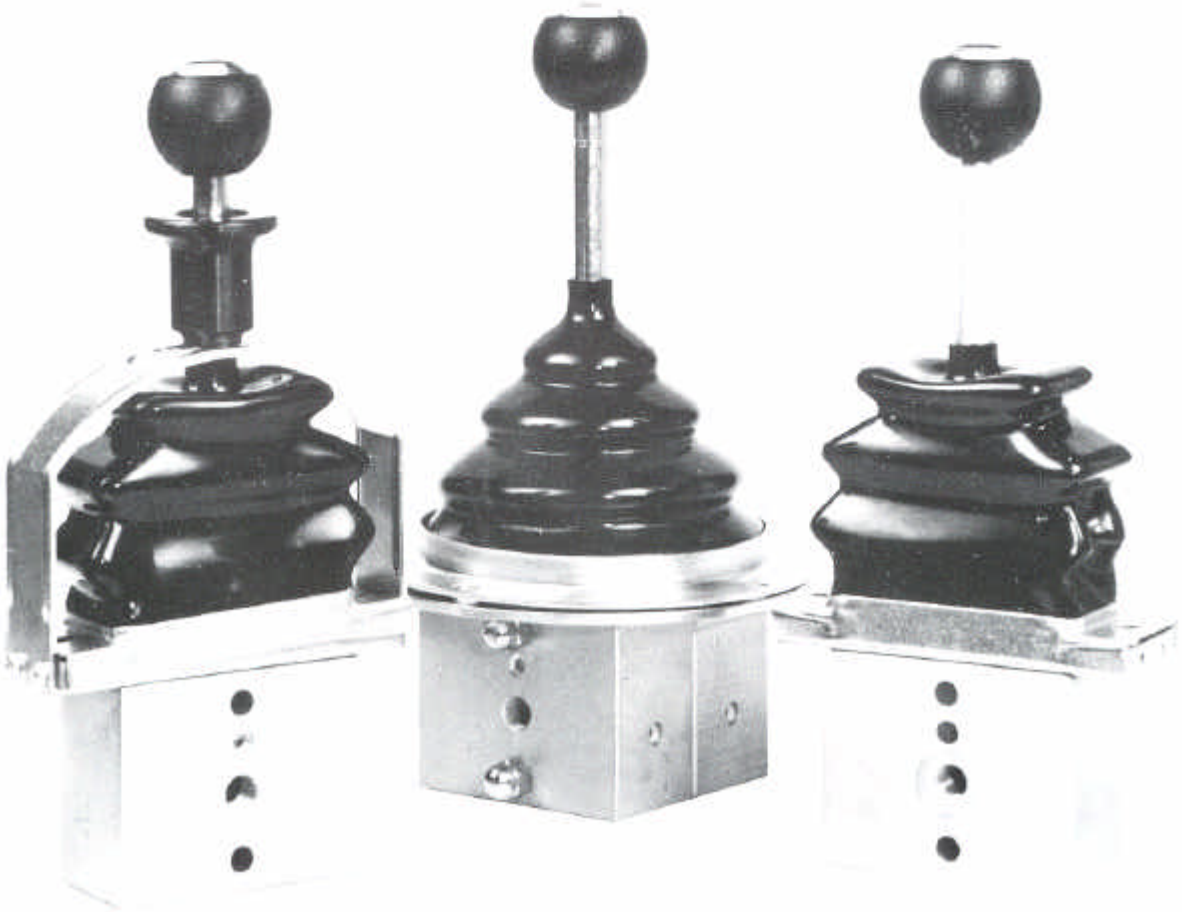

TECHNICAL DATA

Input pressure, max	10 bar
Controlled pressure range	0–6 bar
Ambient temperature (with anti-freeze and/or dry air)	−30°C to +70°C
Lever movement, joystick version	+/− 12°
Lever movement, linear version	+/− 16°

OPERATING FORCES

Normal moment for joystick lever, one function, fully selected, at 6 bar	3,4 Nm
Normal moment for linear lever, fully selected, at 6 bar	2,5 Nm

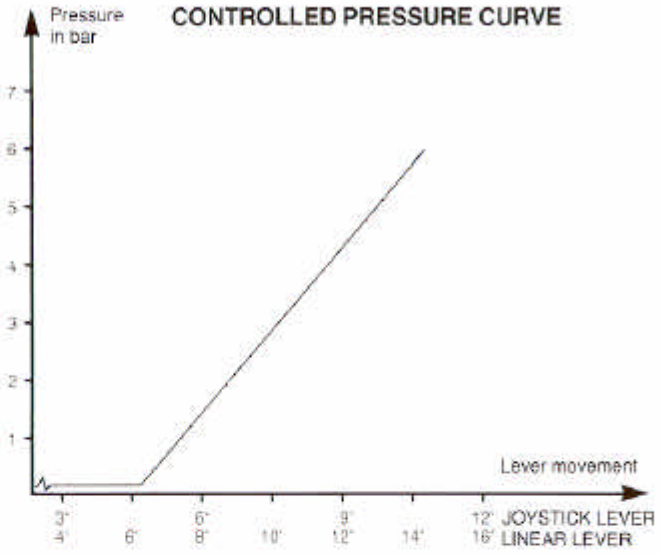

SVLB 01

The valve, which can be stacked together to two or more sections, contains two pressure reducing valves.

The valve is operated by means of a linear lever which can be delivered with a handle with a three-position switch.

The valve housing is made of anodized aluminium. The mounting bracket is cast in a zinc-base alloy. The other details are hardened and rust protected. A gaiter of PVC prevents in an effective way water and dust from penetrating.

At two or more SVLB 01 stacked together, the number of sections are indicated in the designation.

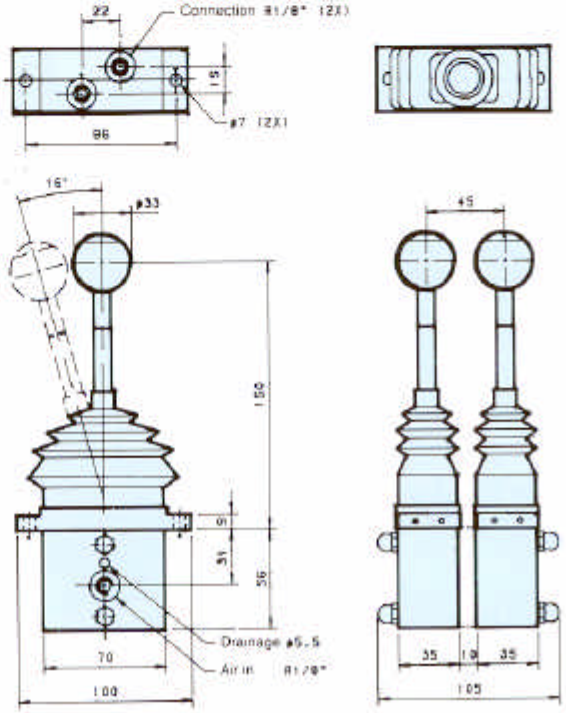

Order example:
SVLB 01/2

SVLL 01

The valve sections are identical with SVLB 01 but they are provided with a lever with a position catch which can be locked in different positions by means of a spring loaded plunger. When disengaged the plunger is lifted from its locked position.

The following locking positions are available:

Locked end position
Locked in both end positions
Locked end and centre position
Locked centre position

If SVLL 01 is to be stacked together, distance pieces 35 mm wide are recommended to make the plungers easily accessible.

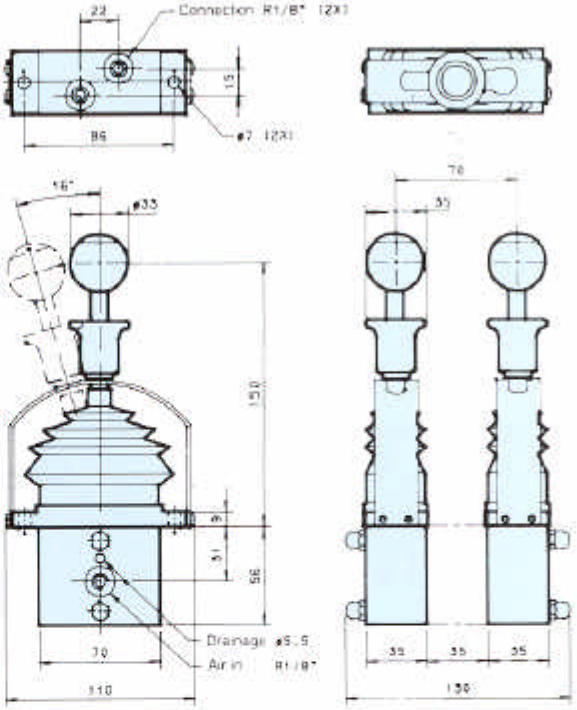

Order example:
SVLL 01/2 with locked end position

SVL 01

SVL 01 consists of two valve sections which are operated by means of a joystick lever and if desired the SVL 01 can be delivered with a handle with a three-position switch.

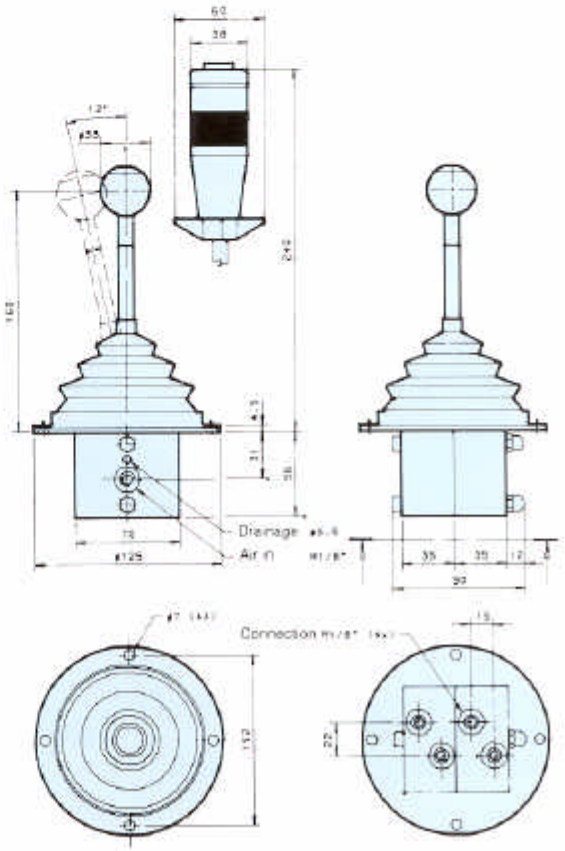

Order example:
SVL 01 with a handle for a three-position switch

ELECTRICAL DATA

Lever with three-position switch, breaking capacity:

DC, resistive load	4 A/24 V
DC or AC, inductive load	4 A/24 V

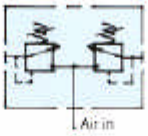

TYPE SVLB 01

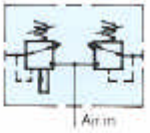

TYPE SVLL 01

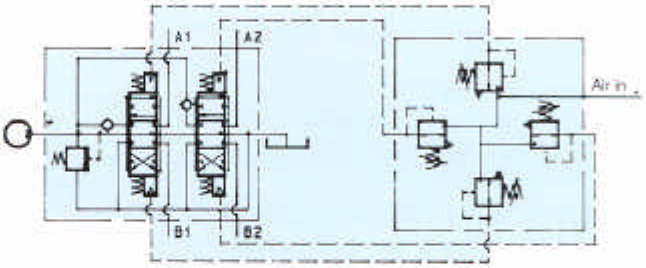

TYPE SVL 01

SVL WEIGHTS, kg

SVLB 01	0.8
SVLL 01	1.0
SVL 01	1.8
Distance piece 10 mm	0.1
Distance piece 35 mm	0.4

The shown curves are universal and display average values.

Subject to alteration without previous notice.

Please consult us in case of doubt.

Nordhydraulic
NORDWIN GROUP

Box 189, SE-872 24 Kramfors, Sweden
Telephone Int + 46 612 71 15 50
Telefax Int. + 46 612 136 30

MEMBER OF ATLE KAROLIN GROUP