HYDAC INTERNATIONAL

Pressure Relief Valve
DB4E-CE

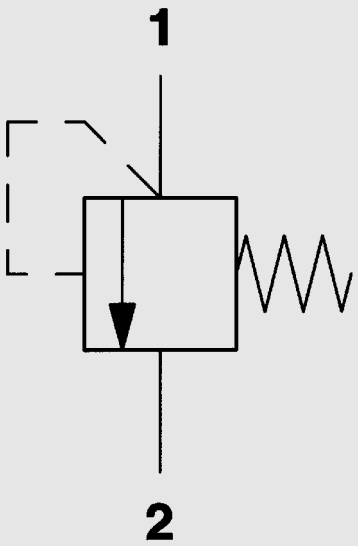

up to 360 bar
up to 28 l/min

E 5.163.3/10.03

1. DESCRIPTION

1.1. GENERAL

According to DIN-ISO 1219, HYDAC pressure relief valves DB4E-CE are valves for oil hydraulic systems to limit pressure across the inlet by opening the outlet against a spring force.

The damping unit fitted on the pressure side ensures that a stable operation is maintained over the whole capacity range and that the noise level is kept to a minimum. An excellent constant-pressure performance is achieved by means of the hydrodynamic lift support. Further advantages of these valves are as follows:

- standardised cavity dimensions means that they are suited to many different applications
- their compact design saves space when installing in connection housings, control blocks etc., especially in confined installation conditions.
- low hysteresis and high stability ensure accurate pressure control
- optimum system adaptation by means of various pressure ranges
- simple installation by means of service-friendly cartridge valve technology
- the zinc-plated surface without additional coating ensures suitability for mobile applications.

According to the Pressure Equipment Directive 97/23/EC, safety devices to prevent excess pressure (safety valves) form part of pressure vessel equipment.
Pressure relief valves DB4E-CE comply with the Pressure Equipment Directive 97/23/EC. The pressure relief valves are set, inspected and sealed by the factory-authorized inspector in accordance with the order specifications (pressure setting).

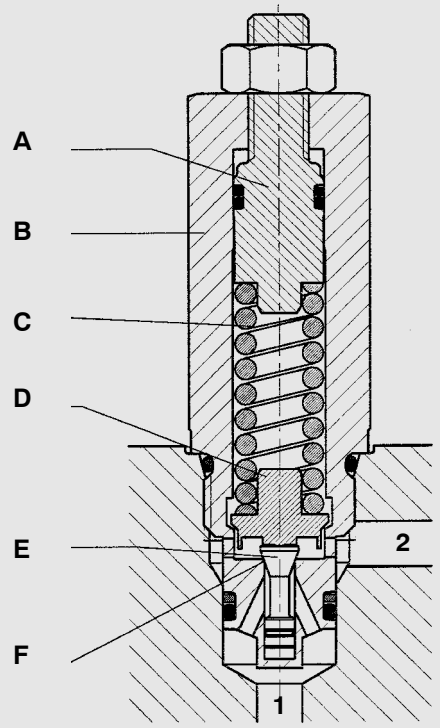

A Adjustment device
B Valve body
C Spring
D Spring plate with hydrodynamic lift support
E Closing cone with damping piston
F Valve seat

1.2. FUNCTION

The valve consists essentially of a valve body with built-in valve seat, a hardened and polished closing cone and the adjustment device for setting the initial spring tension. The spring applies this force to the closing cone and pushes it against the valve seat. On the opposite side of the closing cone, the system pressure acts via port 1 of the valve. If the hydraulic pressure force is below the pre-set spring tension, the valve is closed. If the hydraulic pressure force exceeds the pre-set spring tension, the closing cone is lifted off the valve seat and the operating fluid flows from pressure port 1 to tank port 2.This limits the pressure across port 1.To ensure that stable operation is maintained, the closing cone is rigidly connected to the damping piston which has to displace oil in an aperture with each movement of the closing cone. Each time, this produces an opposing damping force to the direction of movement.

1.3. APPLICATION

HYDAC pressure relief valves DB4E-CE are used as safety valves to limit pressure to the maximum permissible, according to Pressure Equipment Directive (PED) 97/23/EC.

1.4. NOTES

Warning

- For correct operation, the application range and the ambient parameters must not be exceeded.
- Lead seal must not be broken
- Pressure setting must not be altered.
- Type code must remain visible and legible so that clear identification is possible.
- The type of valve must be clearly identifiable from the type code, see 2.1

Danger

- If the connections are incorrect, the safety function of the valve is disabled, see 2.1.1 and 3.
- When fitting the valves into control blocks and housings, the given torque values must be observed, see 3.
- Tank pressure (port 2) must be p_{2max} = 0 bar
- Dismantling the valve is not permitted.
- Only appropriate tools must be used to fit the valve.
- After a breakdown in the system (e.g. fire) the DB valve must be replaced for safety reasons.

2. TECHNICAL SPECIFICATIONS

2.1. GENERAL

2.1.1 Designation and symbol

Pressure relief valve

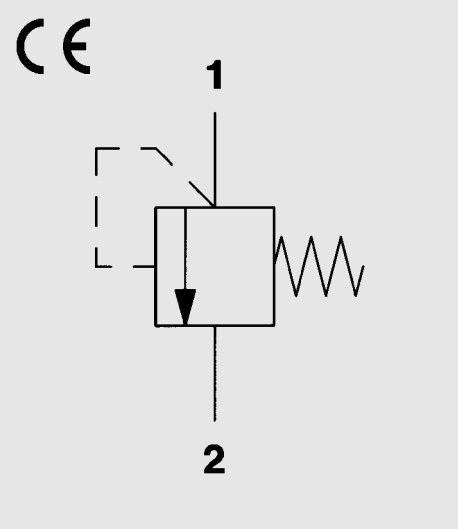

2.1.2 Model code

(also order example)

DB 4 E-012- CE0034.ENISO4126.4L . Q . p

Pressure relief valve

01 = standard model

Series
(determined by manufacturer)

Component approval mark

Qmax
Max. permissible flow rate of pump
(see table for use with model code in l/min)

p
(bar) pressure setting in bar

Standard models:

Stock no. (= order no.)	Model code
3108508	DB4E-012-CE0034.ENISO4126.4L.13.100
3108511	DB4E-012-CE0034.ENISO4126.4L.15.140
3108513	DB4E-012-CE0034.ENISO4126.4L.18.160
3108517	DB4E-012-CE0034.ENISO4126.4L.24.200
3108518	DB4E-012-CE0034.ENISO4126.4L.28.210
3108523	DB4E-012-CE0034.ENISO4126.4L.11.330
3108568	DB4E-012-CE0034.ENISO4126.4L.16.350

Please quote stock number when ordering.
Delivery for non-standard models is longer and the price is higher.

Table for use with model code (see also 2.2.5 Application range)

p (bar)	Q_{max} (l/min)
90-100	13
101-115	20
116-140	15
141-160	18
161-180	22
181-200	24
201-210	28
211-240	18
241-260	20
261-340	11
341-360	16

2.1.3 Type of construction

Cone-seat valve, direct-operated

2.1.4 Type of mounting

Cartridge valve

2.1.5 Mounting position

Optional

2.1.6 Weight

DB4 E...0.14 kg

2.1.7 Direction of flow

From 1 to 2 pressure relief function

2.1.8 Ambient temperature range

Min. -20 °C
Max. +80 °C

2.1.9 Materials

Valve body: high tensile steel
Closing element: hardened and polished steel, wear-resistant
Seals: FPM and PTFE

2.2. HYDRAULIC DETAILS

2.2.1 Pressure fluid

Hydraulic oil to DIN 51524
Part 1 and 2

2.2.2 Viscosity range

Min. 10 mm^2/s
Max. 320 mm^2/s

2.2.3 Operating fluid temperature range

Min. - 20 °C
Max. + 80 5C

2.2.4 Filtration

The clogging of the relief valve and the inlet and outlet must be prevented by fitting and regularly replacing filters.
Max. permissible contamination level of the operating fluid to ISO 4406 class 21/19/16 (NAS 1638 class 10).
We therefore recommend a filter with a minimum retention rate of $b_{20} \geq 100$.

2.2.5 Application range

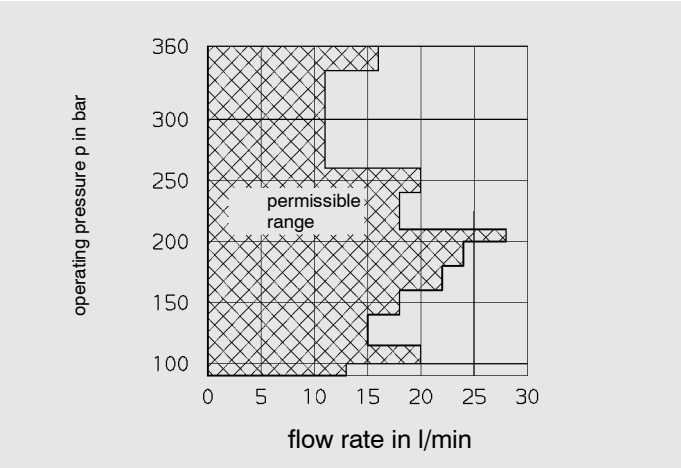

2.2.6 Pressure, dependent on flow rate

(measured at ν = 36 mm^2/s and t_{oil} = 50 °C)

Pressure range...100 bar

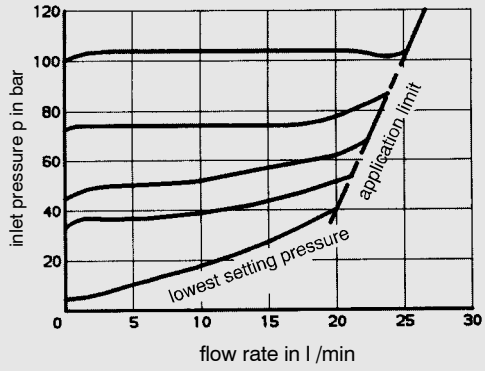

Pressure range...200 bar

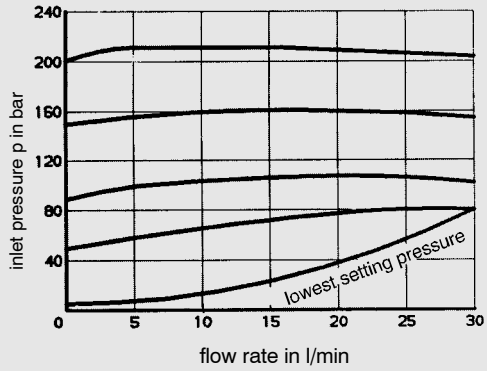

Pressure range...350 bar

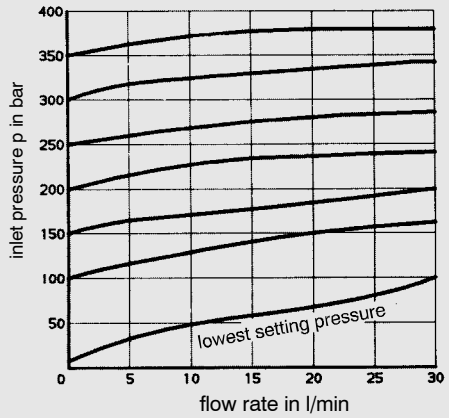

3. DIMENSIONS

DB4E

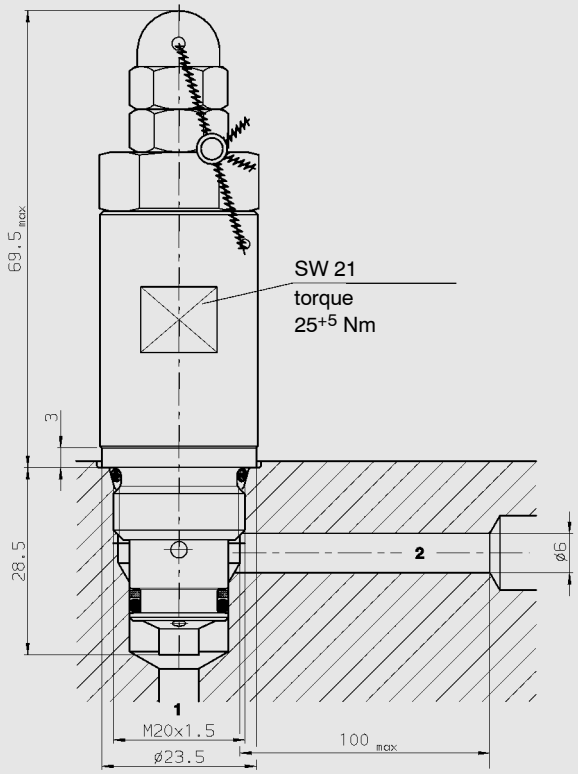

Cavity dimensions 06020:

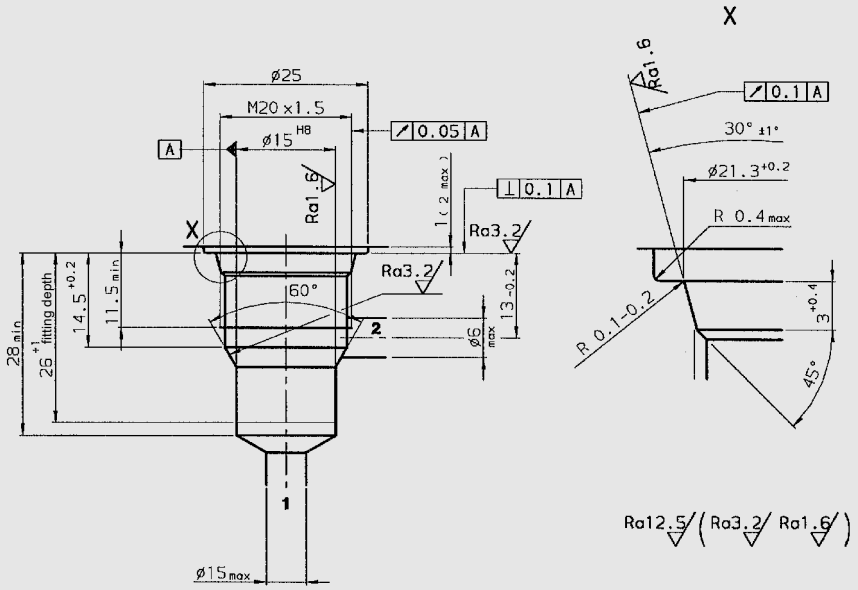

Cartridge form tools

Tool	Stock no.
Countersink	170033
Reamer	1000768
Tap	1002648
Plug gauge	168840

4. NOTE

The information in this brochure relates to the operating conditions and applications described. For applications or operating conditions not described, please contact the relevant technical department.
Subject to technical modifications.